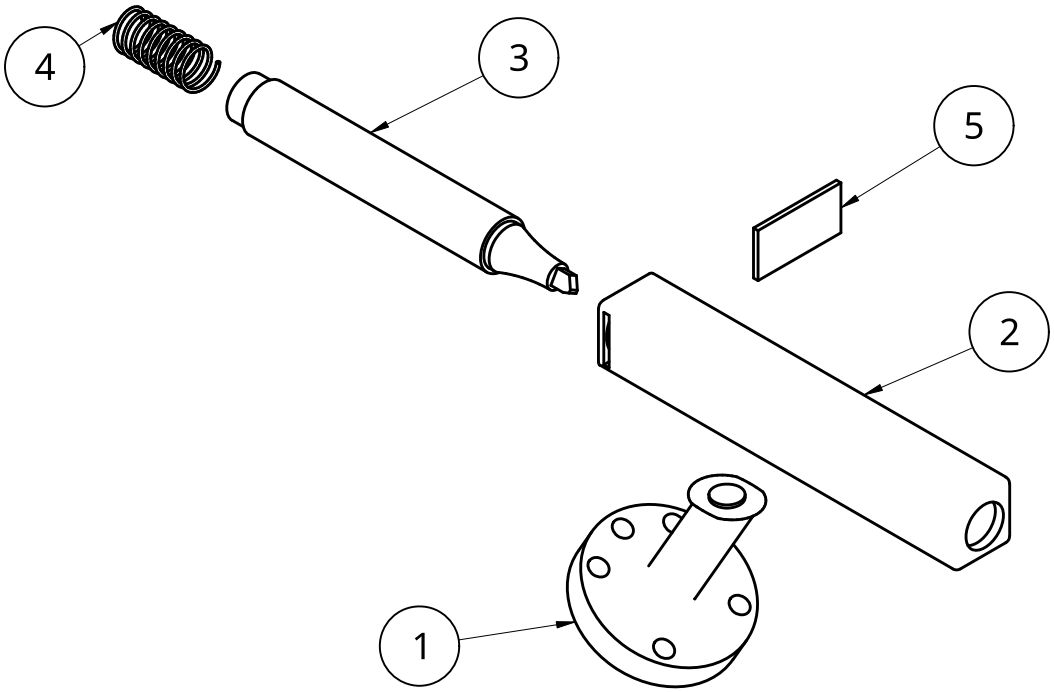

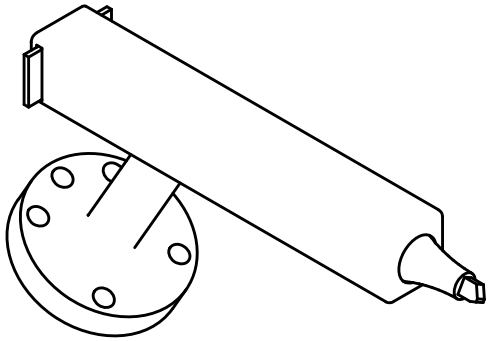

ÍTEM	CANTIDAD	DESCRIPCIÓN	REFERENCIA
5	1	Seguro	Plano 2/4
4	1	Resorte de compresión De=13 L0=40 d≈0.8	-
3	1	Marcador	Pelikan
2	1	Cuerpo	Plano 3/4
1	1	Base	Plano 4/4

LISTA DE PARTES

UNIVERSIDAD NACIONAL DE COLOMBIA

	NAME	SIGNATURE	DATE
DRAWN	JESÚS SÁNCHEZ		2026-03-16
CHECKED			
APPROVED	DAVID PINZÓN		2026-03-16

DO NOT SCALE DRAWING

BREAK ALL SHARP EDGES AND REMOVE BURRS

FIRST ANGLE PROJECTION

MATERIAL: -

FINISH:

UNLESS OTHERWISE SPECIFIED, DIMENSIONS ARE IN MILLIMETERS

TITLE: Herramienta - Ensamble

SIZE: A4 | DWG NO.: ROB2026-1DPJ-1 | REV.: 1

SCALE: 1:2 | WEIGHT: | SHEET: 1 of 4

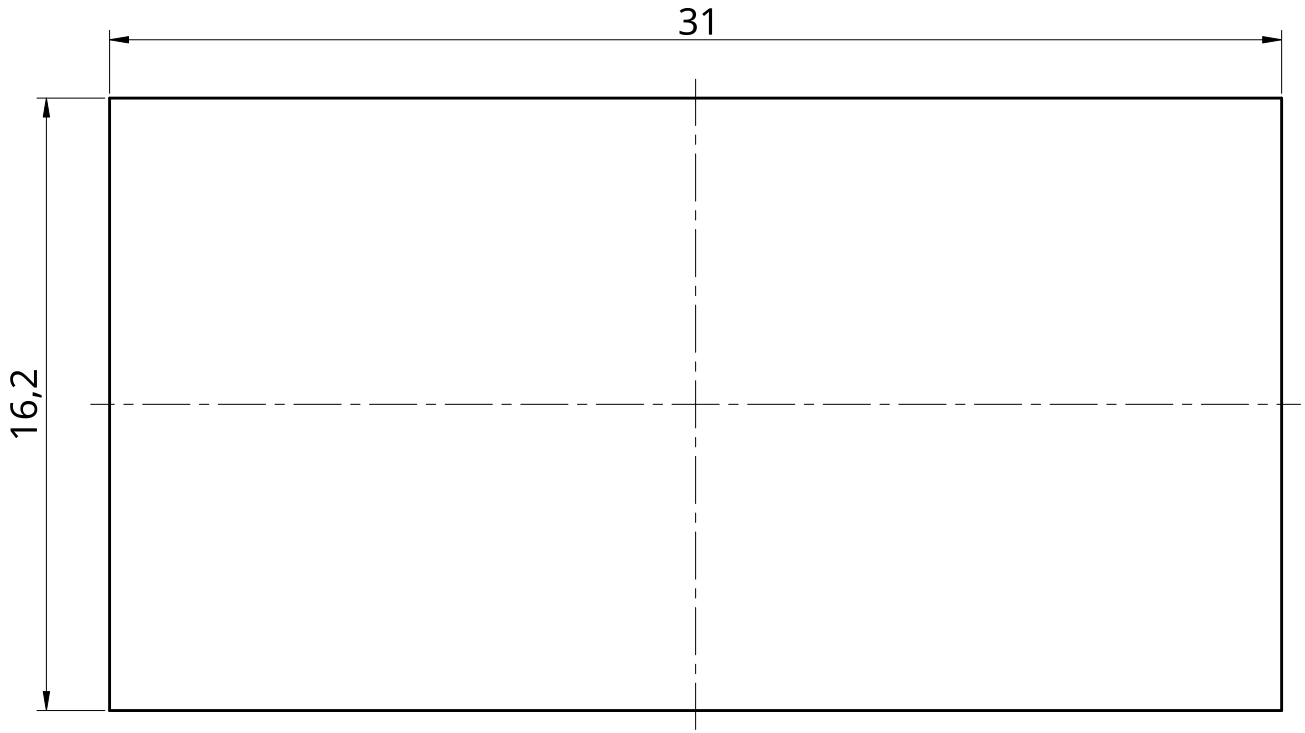

Nota: Espesor de la placa 1.7 mm

		NAME	SIGNATURE	DATE
UNIVERSIDAD NACIONAL DE COLOMBIA	DRAWN	JESÚS SÁNCHEZ		2026-03-16
	CHECKED			
	APPROVED	DAVID PINZÓN		2026-03-16
DO NOT SCALE DRAWING				
BREAK ALL SHARP EDGES AND REMOVE BURRS				
FIRST ANGLE PROJECTION	MATERIAL	PLA	FINISH	

UNLESS OTHERWISE SPECIFIED, DIMENSIONS ARE IN MILLIMETERS

TITLE

Herramienta - Pieza 1

SIZE	DWG NO.	REV.
A4	ROB2026-1DPJ-2	1

SCALE	WEIGHT	SHEET
5:1		2 of 4

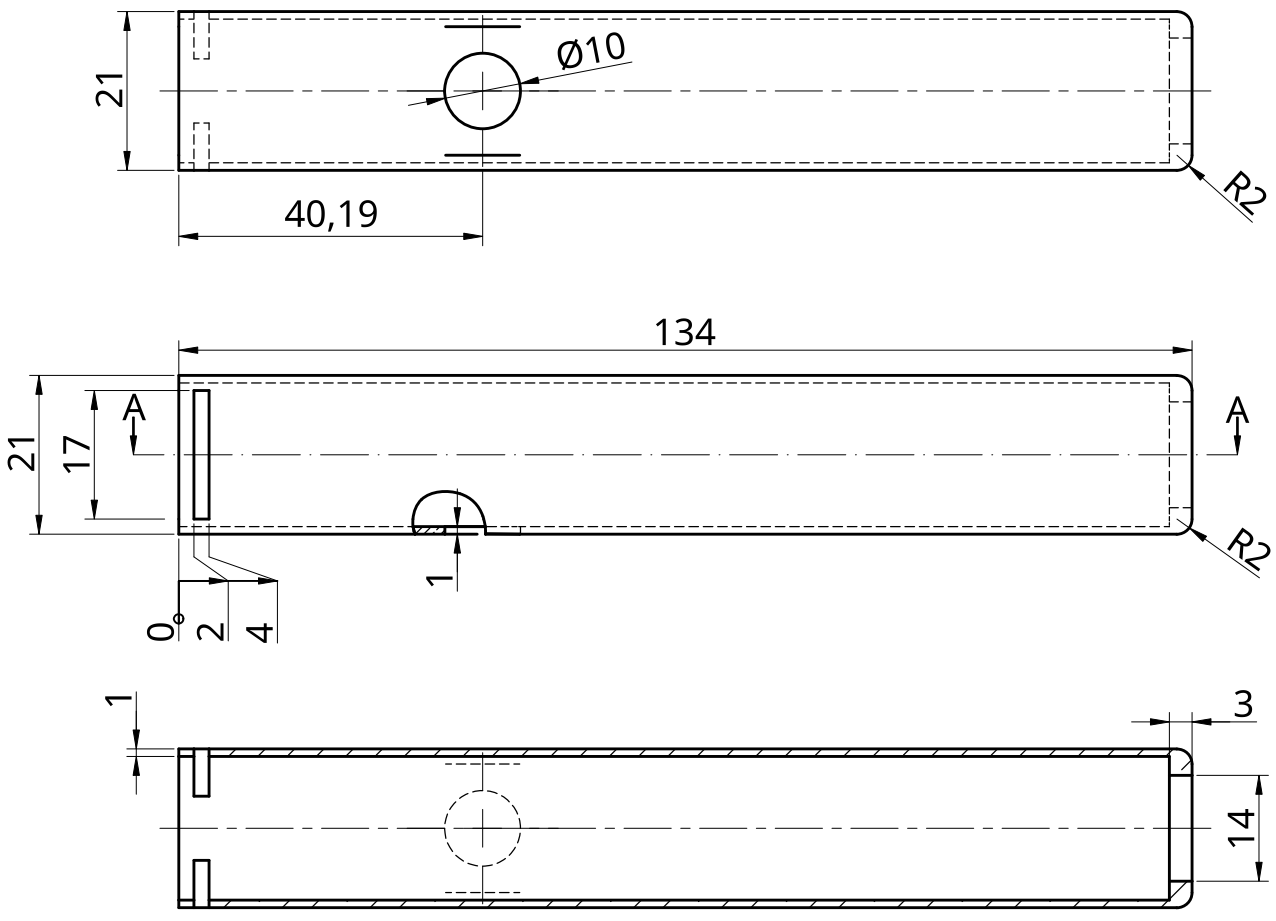

A - A

		NAME	SIGNATURE	DATE
UNIVERSIDAD NACIONAL DE COLOMBIA	DRAWN	JESÚS SÁNCHEZ		2026-03-16
	CHECKED			
	APPROVED	DAVID PINZÓN		2026-03-16
DO NOT SCALE DRAWING				
BREAK ALL SHARP EDGES AND REMOVE BURRS				
FIRST ANGLE PROJECTION	MATERIAL	PLA	FINISH	

UNLESS OTHERWISE SPECIFIED, DIMENSIONS ARE IN MILLIMETERS

TITLE

Herramienta - Pieza 2

SIZE	DWG NO.	REV.
A4	ROB2026-1DPJ-3	1

SCALE	WEIGHT	SHEET
1:1		3 of 4

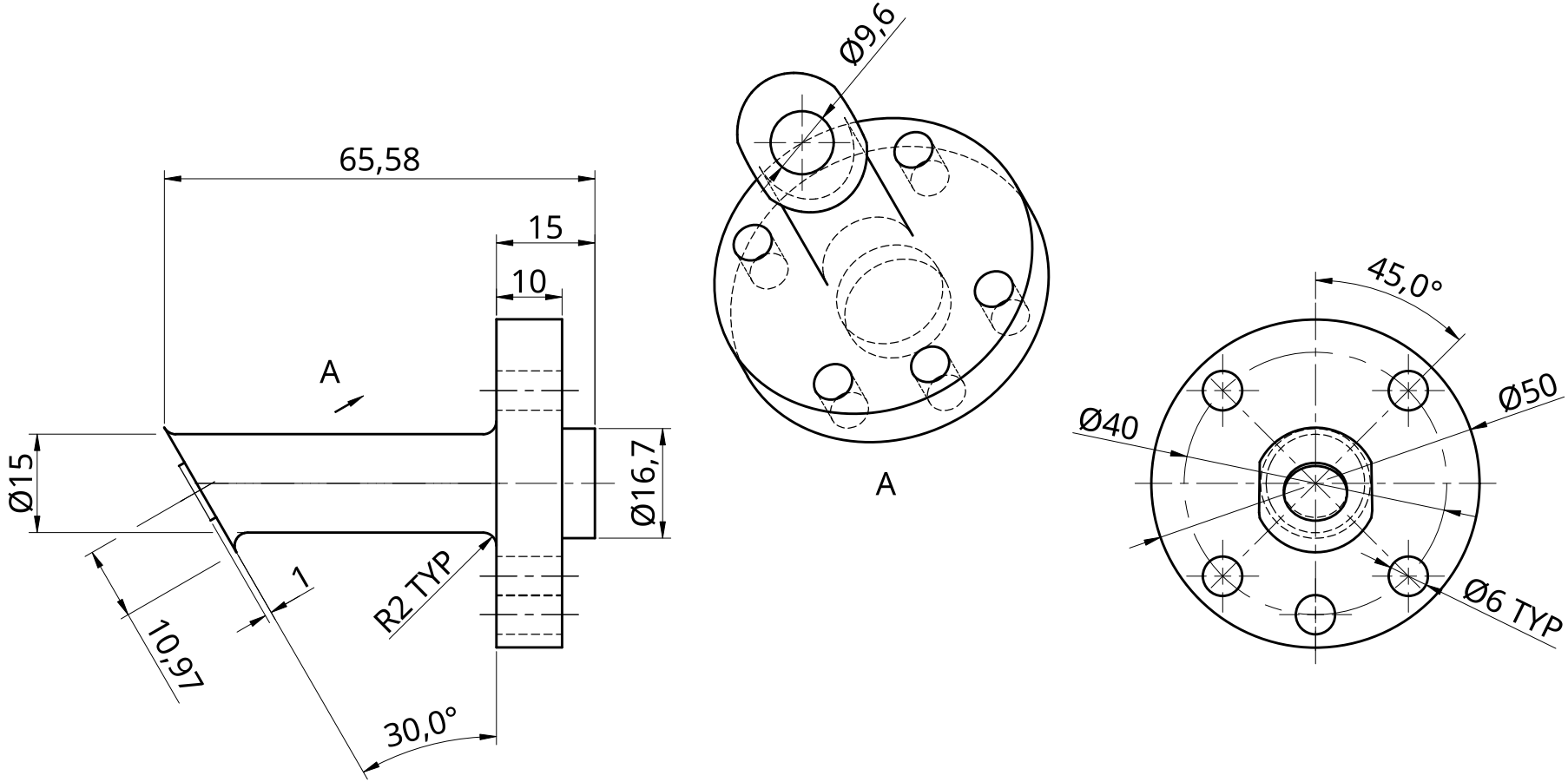

		NAME	SIGNATURE	DATE
UNIVERSIDAD NACIONAL DE COLOMBIA	DRAWN	JESÚS SÁNCHEZ		2026-03-16
	CHECKED			
	APPROVED	DAVID PINZÓN		2026-03-16
DO NOT SCALE DRAWING				
BREAK ALL SHARP EDGES AND REMOVE BURRS				
FIRST ANGLE PROJECTION	MATERIAL	PLA	FINISH	

UNLESS OTHERWISE SPECIFIED, DIMENSIONS ARE IN MILLIMETERS

TITLE

Herramienta - Pieza 3

SIZE	DWG NO.	REV.
A4	ROB2026-1DPJ-4	1

SCALE	WEIGHT	SHEET
1:1		4 of 4